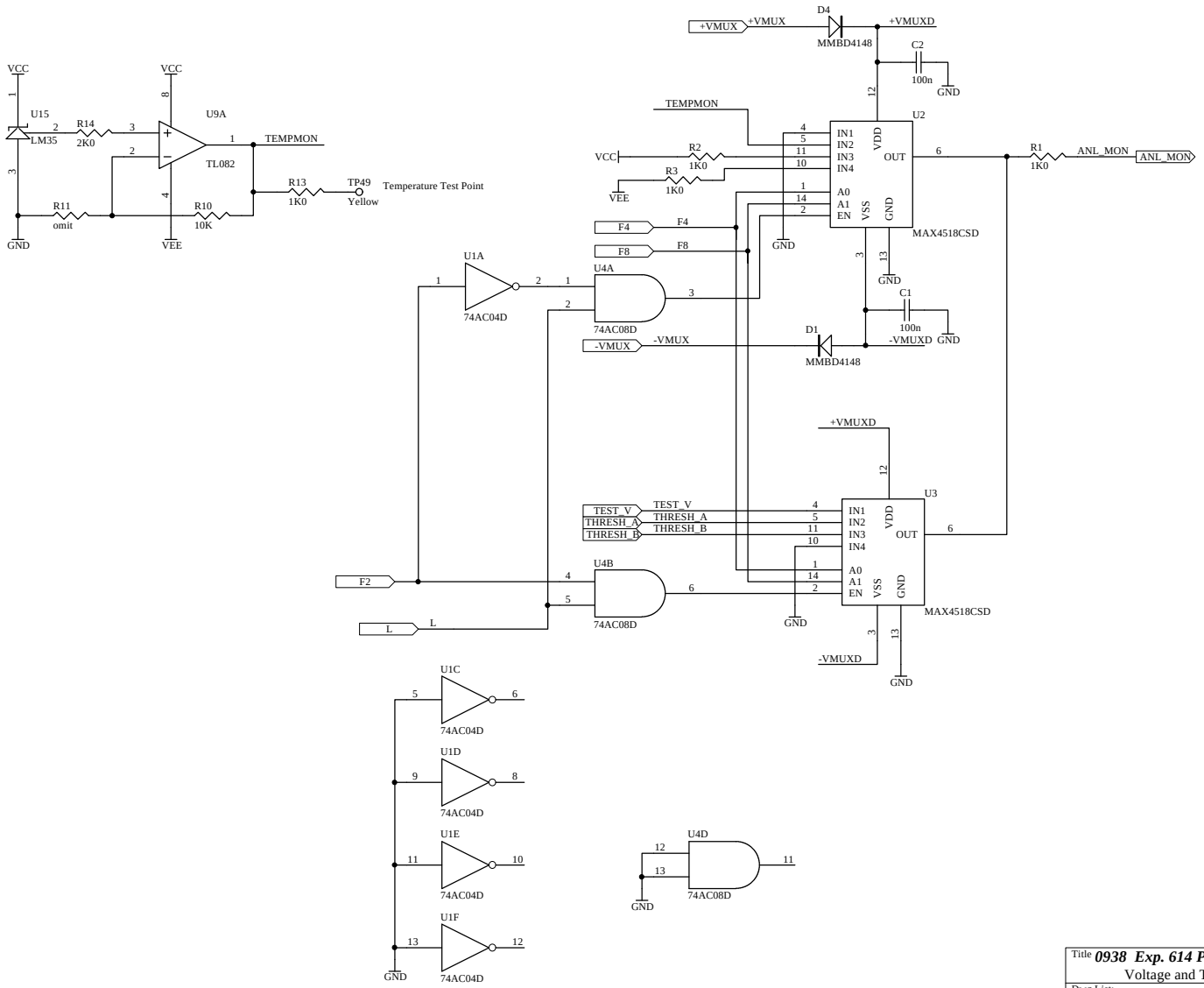

Title **0938 Exp. 614 Postamp/Discriminator**
Voltage and Temperature Measurement

Dwg List:
Drawn By: P. Bennett
Dwg. No.: A-21790
Revision: 1
Disk:
Date: 28-Jul-2000 Time: 08:36:53
File: C:\projects\e614\production_1\prod1.ddb - Monitor.sch
Sheet 11 of 11

TRIUMF
4004 Wesbrook Mall
Vancouver, B.C., Canada
V6T 2A3